30GTN,GTR,GUN,GUR040-110 AIR-COOLED CHILLERS WITH COMFORTLINK™ CONTROLS

— PERFORMANCE DATA

— CERTIFIED DIMENSION PRINT

— FIELD WIRING DIAGRAM

Form 30GTN,GUN-1SB Supersedes New Printed in U.S.A. 3-99 Catalog No. 513-460

Date:	Supersedes:	**30GTN,GUN040-110 COMFORTLINK™ CONTROLS AIR-COOLED CHILLERS**	30GTN,GUN	Rev.:

JOB NAME:	LOCATION:	
BUYER:	BUYER P.O. #	CARRIER #
UNIT NUMBER:	MODEL NUMBER:	
PERFORMANCE DATA CERTIFIED BY:		DATE:

DESCRIPTION

These air-cooled package chillers are factory piped, wired and charged with HCFC-22 (30GUN and 30GUR units are charged with HFC-134a). Rugged, weatherproof construction and compact design make them ideal for rooftop or ground level installation. Upward discharge airflow minimizes directional sound and dissipates heat away from surrounding areas.

FEATURES

Standard one-year warranty (U.S.A. and Canada only).

Multiple reciprocating serviceable-hermetic compressors mounted on spring isolated rails. Automatically reversible oil pump, thermal overload protection, suction and discharge service valves.

Calibrated, ambient compensated magnetic-trip circuit breakers with manual reset provide single-phase and phase-reversal protection.

Insert-type 180-watt crankcase heaters.

High- and low-pressure safety switches.

Dual refrigerant circuits. Each refrigerant circuit contains: Hot gas muffler for each compressor, excessive pressure relief device, liquid line shut-off valve, replaceable-core filter drier, moisture indicating sight glass, loss of oil pressure protection.

Electronic expansion valve in each refrigeration circuit.

Automatic lead-lag feature automatically alternates the lead circuits to ensure even cycles and run time.

Single point main power connection.

Compressor timed pumpdown cycle at start-up and stopping of each refrigeration circuit cooling cycle.

Unit capable of starting with up to 95° F (35° C) water entering the cooler, with 125° F (52° C) outdoor air.

Units equipped with electronic expansion valves are capable of starting and operating down to 0° F (18° C) outside-air temperatures with wind baffles installed. Below 0° F (18° C) outside-air temperature, the unit must be modified for low-ambient operation. Below 32° F (0° C), unit must be equipped with wind baffles.

Low water flow detection provided by internal control devices.

Proof of flow switches recommended.

Control capacity based on leaving-water temperature, compensated by return-water temperature.

Cooler flow may be either constant or variable.

Provisions can be made for reset by either outdoor, space, or return-water temperature.

Clear language scrolling marquee alphanumeric diagnostic display and set point panel for set points, service diagnostics and operational quick tests.

Integral shell-and-tube cooler with dual refrigerant circuits, expanded polyvinyl chloride insulation (and electric heater cable for freeze protection) optional.

Non-ferrous condenser coils with mechanically bonded plate fins and integral subcooling circuit.

Direct-drive condenser fans and motors are supported by a formed-wire mount to reduce vibration.

Fan motors are three-phase with permanently lubricated ball bearings and inherently protected.

Multiple fans are used for head pressure control during intermediate season.

Unit can be equipped (accessory) with an energy management module for load shedding, demand limiting or reset via 4 to 20 mA signal.

The unit cabinet consists of galvanized steel casing, zinc phosphatized, with an electrostatically applied baked enamel finish, capable of withstanding a 500-hour salt spray test.

Hinged control box access panels.

Alarm circuit wiring standard.

PERFORMANCE DATA

UNIT

Capacity (tons) _____

Compressor Power Input _____ kW

Unit Power Input _____ kW

Minimum Outdoor Operating Temperature _____ °F (°C)

Capacity Control Steps _____ Minimum Capacity _____ %

Refrigerant _____

Condenser Entering Air Temperature _____ °F (°C)

Saturated Discharge Temperature _____ °F (°C)

COOLER

Entering Water Temperature _____ °F (°C)

Leaving Water Temperature _____ °F (°C)

Chilled Water Flow _____ Gpm (L/s)

Chilled Water Pressure Drop _____ ft wg (kPa)

Fouling Factor _____

Fluid _____

ELECTRICAL DATA

Power Supply to Unit _____ Volts _____ Ph _____ Hz

Power Supply to Control Circuit _____ Volts _____ Ph _____ Hz

Maximum Instantaneous Current Flow _____ Amps

Minimum Circuit Amps _____

Maximum Fuse Amps _____

Control Circuit Fuse Amps _____

FACTORY-INSTALLED OPTIONS

- ☐ Energy Management Module
- ☐ Motormaster® III Control
- ☐ Brine — 15° F to 40° F LWT
- ☐ Cooler Heater
- ☐ Part Winding Start
- ☐ Thermostatic Expansion Valve (TXV)
- ☐ Low Noise Fans
- ☐ High Static Fans
- ☐ Hot Gas Bypass
- ☐ Non-Fused Disconnect
- ☐ Precoated Aluminum Fins
- ☐ Copper-Copper Condenser Coils
- ☐ Postcoated Copper Fins
- ☐ Postcoated Aluminum Fins

ACCESSORIES

- ☐ _____
- ☐ _____
- ☐ _____
- ☐ _____
- ☐ _____
- ☐ _____

CUT ALONG DOTTED LINE

CUT ALONG DOTTED LINE

CERTIFIED DIMENSION PRINT

UNITED TECHNOLOGIES CARRIER
P O BOX 4808 SYRACUSE N. Y. 13221

SUBMISSION OF THESE DRAWINGS OR DOCUMENTS DOES NOT CONSTITUTE PART PERFORMANCE OR ACCEPTANCE OF CONTRACT

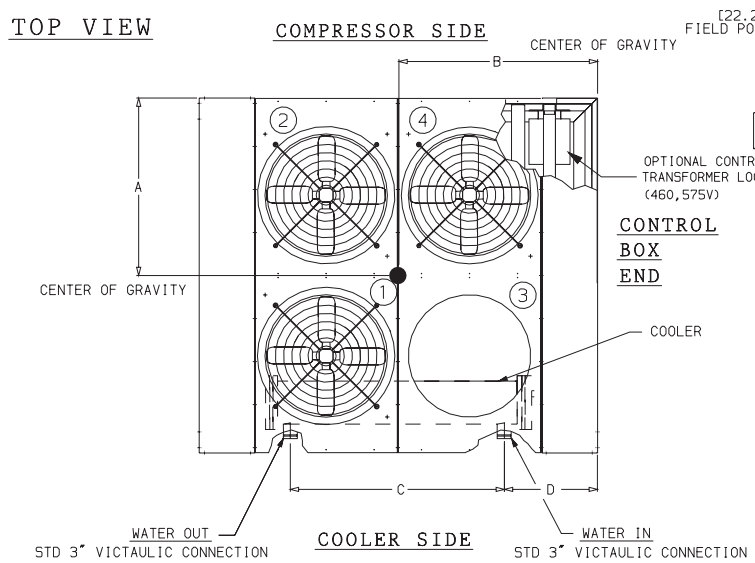

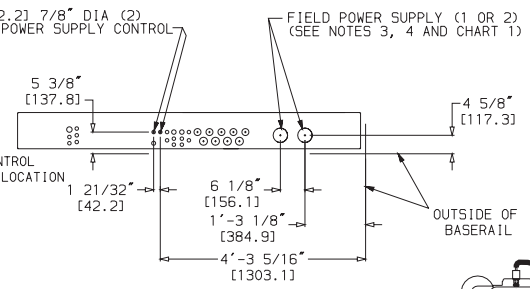

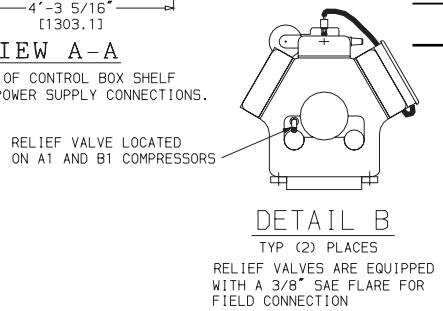

UNIT 30GTN/R,30GUN/R	DIMENSIONS — ft-in. [mm]			
	A	B	C	D
040	3-5 11/16 [1059]	3-10 13/16 [1189]	4-5½ [1359]	1-11⅛ [587.5]
040C	3-5⅞ [1064]	3-11 [1194]	4-5½ [1359]	1-11⅛ [587.5]
045	3-6 1/16 [1069]	3-10 13/16 [1189]	5-5½ [1663]	1-5 3/16 [436.6]
045C	3-6 3/16 [1072]	3-11 [1194]	5-5½ [1663]	1-5 3/16 [436.6]
050	3-5⅞ [1064]	3-11 [1194]	5-5½ [1663]	1-5 3/16 [436.6]
050C	3-6 [1067]	3-11 3/16 [1199]	5-5½ [1663]	1-5 3/16 [436.6]

NOTES:
1. The approximate operating weight of the unit is:
   30GTN/R,30GUN/R040 — 3590 lbs [1628 kg]
   30GTN/R,30GUN/R040C — 3878 lbs [1759 kg]
   30GTN/R,30GUN/R045 — 3736 lbs [1694 kg]
   30GTN/R,30GUN/R045C — 4024 lbs [1825 kg]
   30GTN/R,30GUN/R050 — 3916 lbs [1776 kg]
   30GTN/R,30GUN/R050C — 4349 lbs [1972 kg]
   Weights are based on 50 Hz units.
2. Unit must have clearances for airflow as follows:
   Top — Do not restrict in any way.
   Ends — [1524 mm] 5 ft
   Sides — [1829 mm] 6 ft
3. Two 2.00 in. diameter holes would be recommended for parallel conductors on 040 and 045 (208/230 volt) units.
4. One 3⅝ in. diameter hole would be recommended for single entry power on 050 (208/230 volt) units.
5. Mounting holes may be used to mount unit to concrete pad. They are not recommended for spring isolator location.
6. If spring isolators are used, a perimeter support channel between the unit and the isolators is recommended.
7. When unit has non-fused disconnect option, power side door opens in opposite direction. Non-fused disconnect option available on all voltages.
8. Dimensons in [ ] are in millimeters.

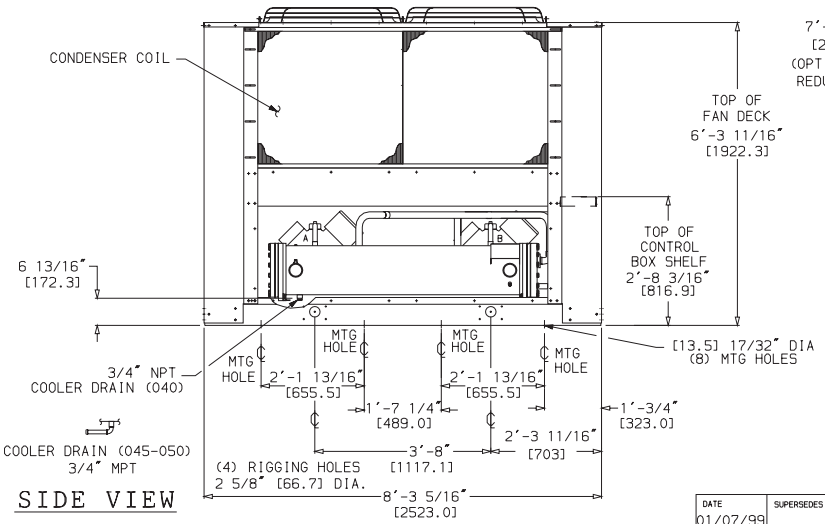

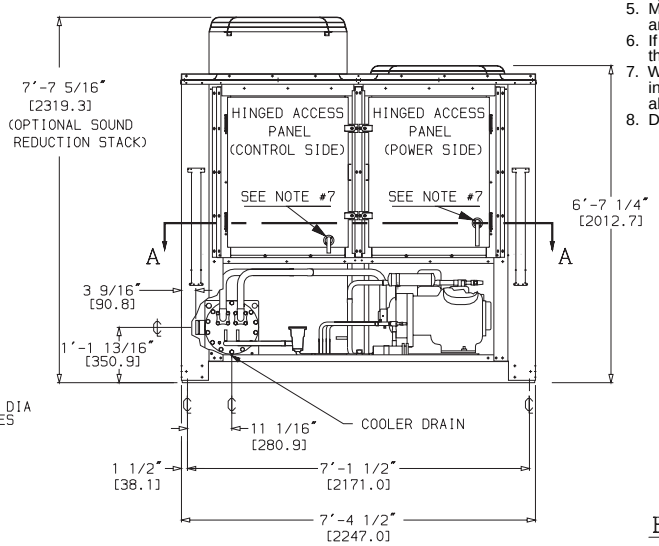

CHART 1: FIELD POWER SUPPLY CONNECTIONS

UNIT	VOLTAGE	Hz	DIAMETER — in. [mm]	QTY.
040,045	208/230	60	3⅝ [92.0]	1
050	208/230	60	2½ [63.5]	2
040-050	460	60	2½ [63.5]	1
040-050	575	60	2½ [63.5]	1
040-050	380	60	2½ [63.5]	1
040,045	346	50	2½ [63.5]	1
050	346	50	3⅝ [92.0]	1
040,045	380/415	50	2½ [63.5]	1
050	380/415	50	3⅝ [92.0]	1

DATE	SUPERSEDES			REV
01/07/99	NEW	30GTN/R,30GUN/R040,045,050 AIR COOLED LIQUID CHILLER	30GT515300	-

CERTIFIED DIMENSION PRINT

UNITED TECHNOLOGIES CARRIER
P O BOX 4808
SYRACUSE N. Y.
13221

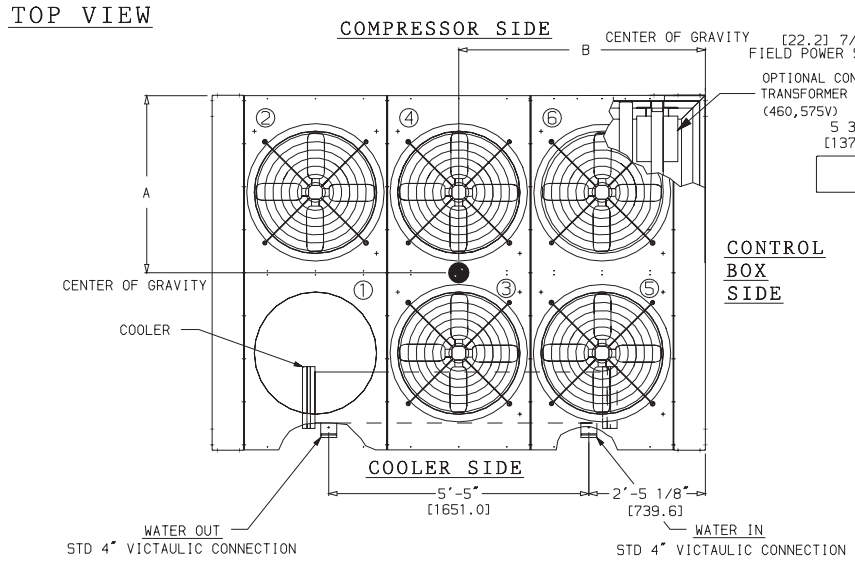

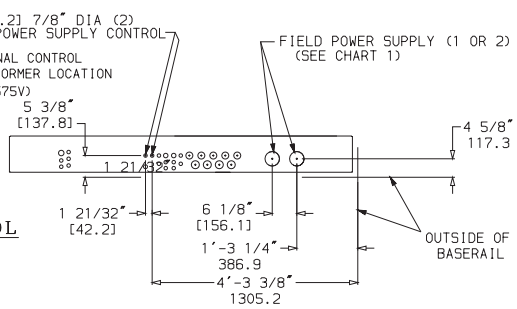

VIEW A–A

TOP VIEW OF CONTROL BOX SHELF
WITH FIELD POWER SUPPLY CONNECTIONS.

UNIT 30GTN/R,30GUN/R	DIMENSIONS — ft-in. [mm]	
	A	B
060	3-6⅞ [1090]	4-10⁹⁄₁₆ [1481]
060C	3-7 [1092]	4-10⁹⁄₁₆ [1488]
070	3-6 [1067]	4-10½ [1486]
070C	3-6³⁄₁₆ [1072]	4-10⅞ [1496]

NOTES:
1. The approximate operating weight of the unit is:
   30GTN/R,30GUN/R060 — 4780 lbs [2168 kg]
   30GTN/R,30GUN/R060C — 5197 lbs [2357 kg]
   30GTN/R,30GUN/R070 (60 Hz) — 5028 lbs [2280 kg]
   30GTN/R,30GUN/R070 (60 Hz) — 5656 lbs [2565 kg]
   30GTN/R,30GUN/R070 (50 Hz) — 5453 lbs [2473 kg]
   30GTN/R,30GUN/R070C (50 Hz) — 6081 lbs [2758 kg]
   060 weights are based on 50 Hz units.
2. Unit must have clearances for airflow as follows:
   Top — Do not restrict in any way.
   Ends — [1524 mm] 5 ft
   Sides — [1829 mm] 6 ft
3. Mounting holes may be used to mount unit to concrete pad. They are not recommended for spring isolator location.
4. If spring isolators are used, a perimeter support channel between the unit and the isolators is recommended.
5. When unit has non-fused disconnect option, power side door opens in opposite direction. Non-fused disconnect option available on all voltages.
6. Dimensons in [ ] are in millimeters.

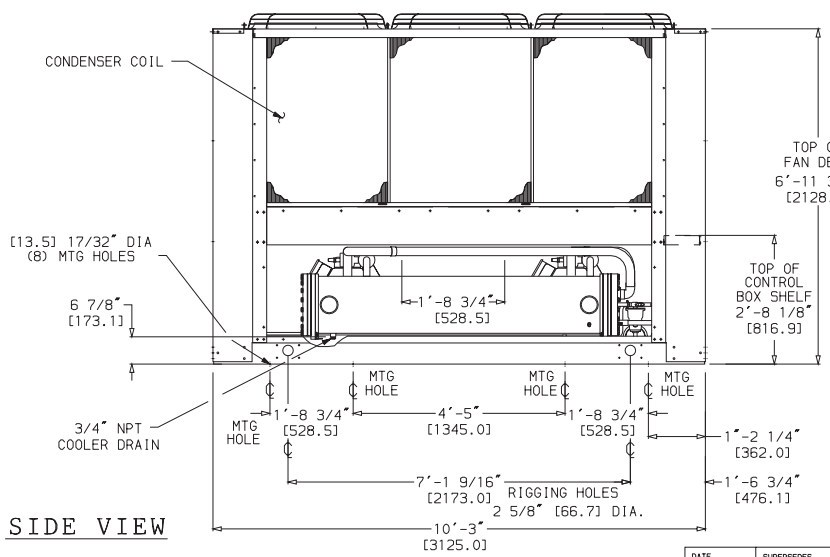

SIDE VIEW

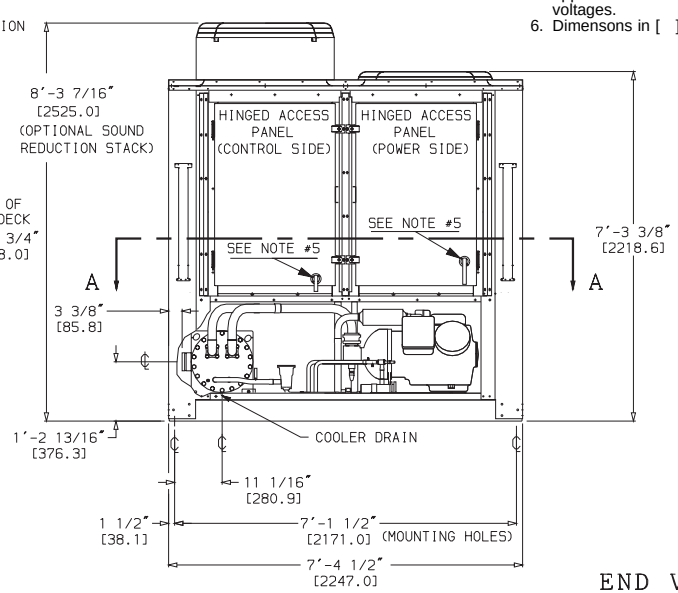

END VIEW

CHART 1: FIELD POWER SUPPLY CONNECTIONS

UNIT	VOLTAGE	Hz	DIAMETER — in. [mm]	QTY.
060	208/230	60	2½ [63.5]	2
070	208/230	60	3⅝ [92.0]	2
060	460	60	2½ [63.5]	1
070	460	60	3⅝ [92.0]	1
060,070	575	60	2½ [63.5]	1
060,070	380	60	3⅝ [92.0]	1
060,070	346	50	3⅝ [92.0]	1
060,070	380/415	50	3⅝ [92.0]	1

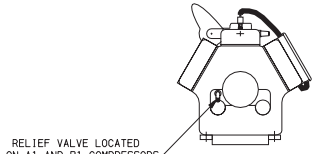

DETAIL B
TYP (2) PLACES

RELIEF VALVES ARE EQUIPPED WITH A 3/8" SAE FLARE FOR FIELD CONNECTION

DATE	SUPERSEDES			REV
01/07/99	NEW	30GTN/R,30GUN/R060,070 AIR COOLED LIQUID CHILLER	30GT515301	–

CUT ALONG DOTTED LINE

CUT ALONG DOTTED LINE

CERTIFIED DIMENSION PRINT

UNITED TECHNOLOGIES CARRIER
P O BOX 4808 SYRACUSE N. Y. 13221

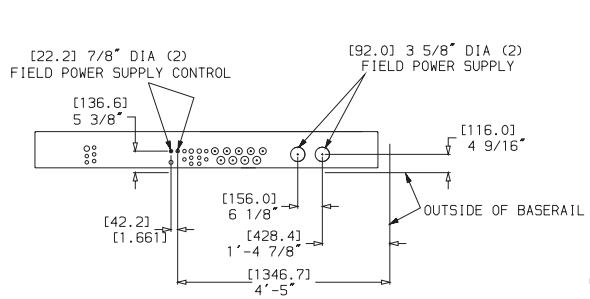

VIEW A-A

TOP VIEW OF CONTROL BOX SHELF
WITH FIELD POWER SUPPLY CONNECTIONS

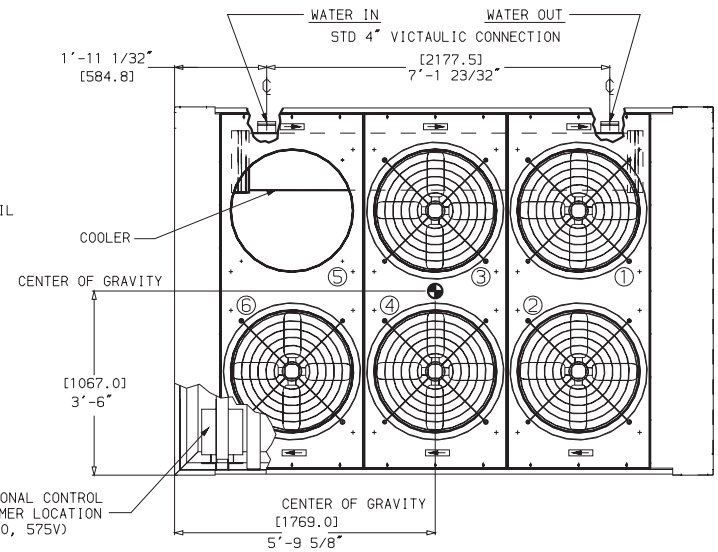

NOTES:
1. The approximate operating weight of the unit is:
   30GTN/R,30GUN/R080 — 6720 lbs [3055 kg]
   30GTN/R,30GUN/R080C — 7445 lbs [3384 kg]
2. Unit must have clearances for airflow as follows:
   Top — Do not restrict in any way.
   Ends — [1524 mm] 5 ft
   Sides — [1829 mm] 6 ft
3. Mounting holes may be used to mount unit to concrete pad. They are not recommended for spring isolator location.
4. If spring isolators are used, a perimeter support channel between the unit and the isolators is recommended.
5. When unit has non-fused disconnect option, power side door opens in opposite direction. Non-fused disconnect option mounted in control box on 380, 460, 575 v (60 Hz) and 400 v (50 Hz). For 208/230 v (60 Hz), non-fused disconnect mounted underneath control box.
6. 30GTN/R080 is also Module B for 30GTN/R230.
7. Dimensons in [ ] are in millimeters.

TOP VIEW

RELIEF VALVE LOCATED
ON A2 AND B1 COMPRESSORS

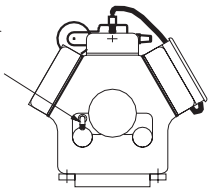

DETAIL B

TYP (2) PLACES

RELIEF VALVES ARE EQUIPPED
WITH A 3/8" SAE FLARE FOR
FIELD CONNECTION

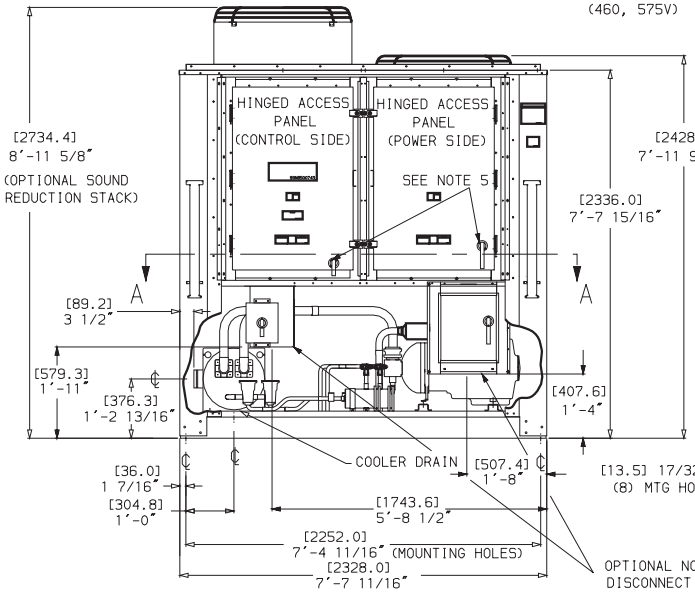

END VIEW

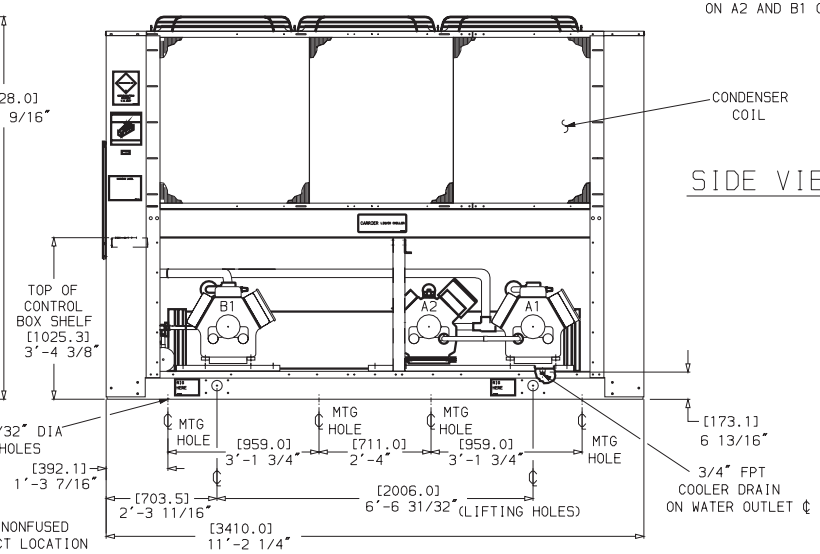

SIDE VIEW

OPTIONAL NONFUSED
DISCONNECT LOCATION
(208/230V ONLY)

DATE	SUPERSEDES			REV
01/07/99	NEW	30GTN/R,30GUN/R080 AIR COOLED LIQUID CHILLER	30GT515297	-

CERTIFIED DIMENSION PRINT

UNITED TECHNOLOGIES CARRIER
P O BOX 4808
SYRACUSE N. Y.
13221

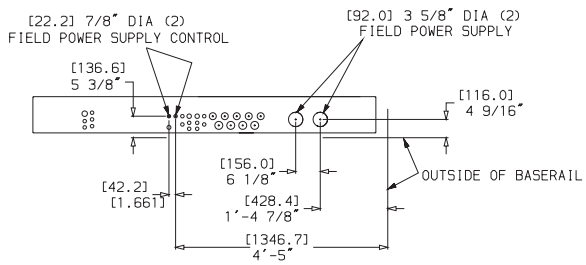

VIEW A-A

TOP VIEW OF CONTROL BOX SHELF
WITH FIELD POWER SUPPLY CONNECTIONS

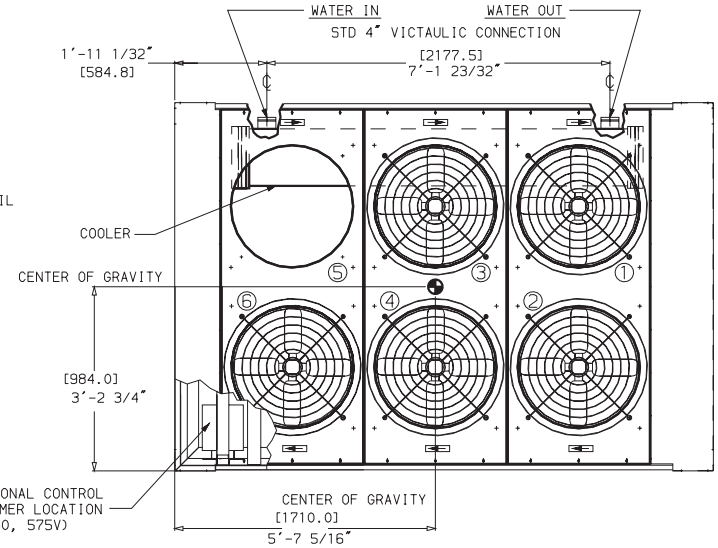

TOP VIEW

NOTES:
1. The approximate operating weight of the unit is:
   30GTN/R,30GUN/R090 — 7135 lbs [3243 kg]
   30GTN/R,30GUN/R090C — 7860 lbs [3573 kg]
2. Unit must have clearances for airflow as follows:
   Top — Do not restrict in any way.
   Ends — [1524 mm] 5 ft
   Sides — [1829 mm] 6 ft
3. Mounting holes may be used to mount unit to concrete pad. They are not recommended for spring isolator location.
4. If spring isolators are used, a perimeter support channel between the unit and the isolators is recommended.
5. When unit has non-fused disconnect option, power side door opens in opposite direction. Non-fused disconnect option mounted in control box on 380, 460, 575 v (60 Hz) and 400 v (50 Hz). For 208/230 v (60 Hz), non-fused disconnect mounted underneath control box.
6. 30GTN/R090 is also Module B for 30GTN/R245.
7. Dimensons in [ ] are in millimeters.

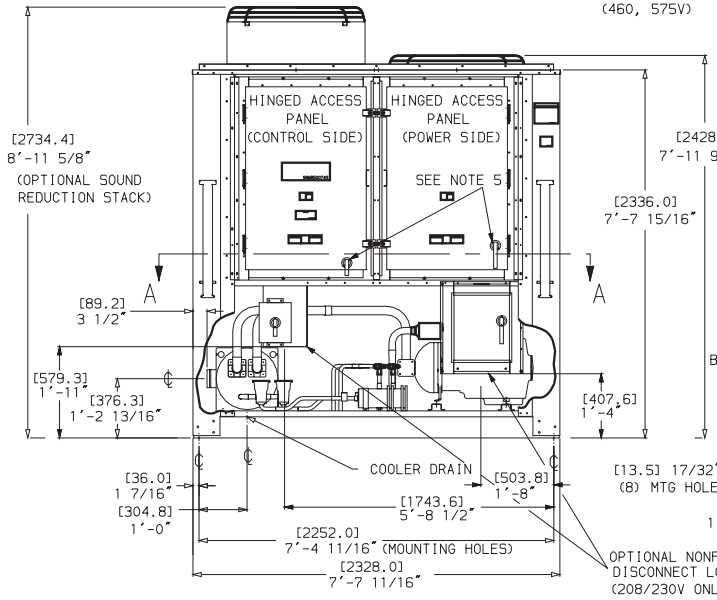

END VIEW

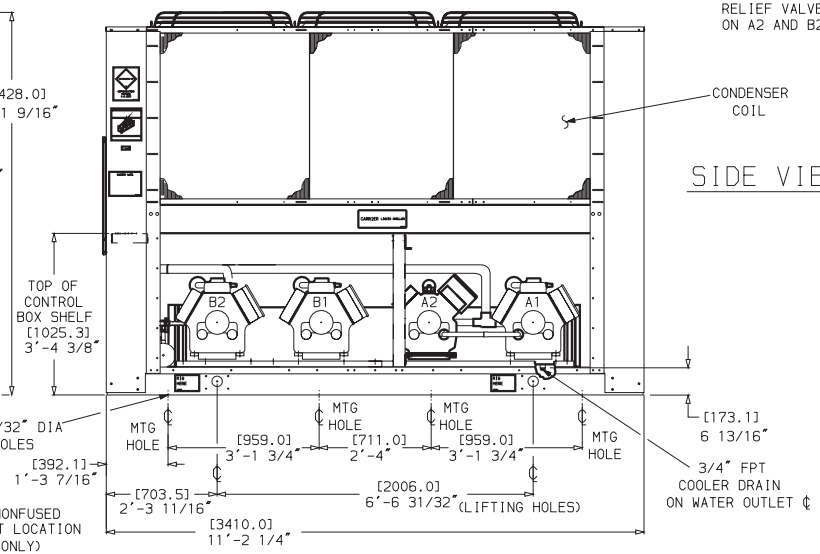

SIDE VIEW

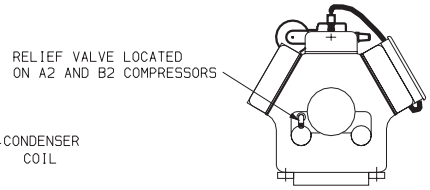

DETAIL B

TYP (2) PLACES

RELIEF VALVES ARE EQUIPPED
WITH A 3/8" SAE FLARE FOR
FIELD CONNECTION

DATE	SUPERSEDES			REV
01/07/99	NEW	30GTN/R,30GUN/R090 AIR COOLED LIQUID CHILLER	30GT515298	–

CUT ALONG DOTTED LINE CUT ALONG DOTTED LINE

CERTIFIED DIMENSION PRINT

UNITED TECHNOLOGIES CARRIER
P O BOX 4808 SYRACUSE N. Y. 13221

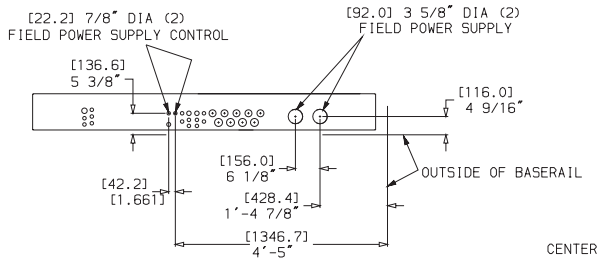

VIEW A-A

TOP VIEW OF CONTROL BOX SHELF
WITH FIELD POWER SUPPLY CONNECTIONS

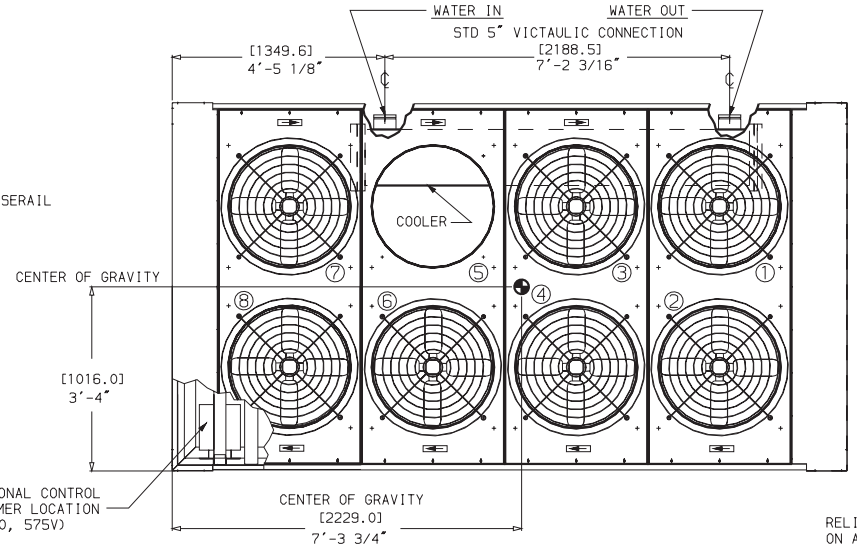

TOP VIEW

NOTES:
1. The approximate operating weight of the unit is:
   30GTN/R,30GUN/R100 — 8710 lbs [3960 kg]
   30GTN/R,30GUN/R100C — 9660 lbs [4390 kg]
   30GTN/R,30GUN/R110 — 8840 lbs [4018 kg]
   30GTN/R,30GUN/R110C — 9790 lbs [4450 kg]
2. Unit must have clearances for airflow as follows:
   Top — Do not restrict in any way.
   Ends — [1524 mm] 5 ft
   Sides — [1829 mm] 6 ft
3. Mounting holes may be used to mount unit to concrete pad. They are not recommended for spring isolator location.
4. If spring isolators are used, a perimeter support channel between the unit and the isolators is recommended.
5. 30GTN/R100 is also Module B for 30GTN/R255,270. 30GTN/R110 is also Module B for 30GTN/R290,315.
6. When unit has non-fused disconnect option, power side door opens in opposite direction. Non-fused disconnect option mounted in control box on 380, 460, 575 v (60 Hz) and 400 v (50 Hz). For 208/230 v (60 Hz), non-fused disconnect mounted underneath control box.
7. Dimensons in [ ] are in millimeters.

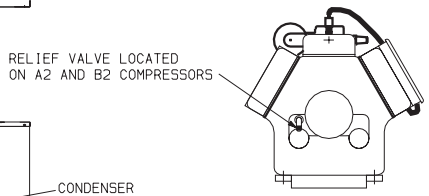

DETAIL B

TYP (2) PLACES

RELIEF VALVES ARE EQUIPPED WITH A 3/8" SAE FLARE FOR FIELD CONNECTION

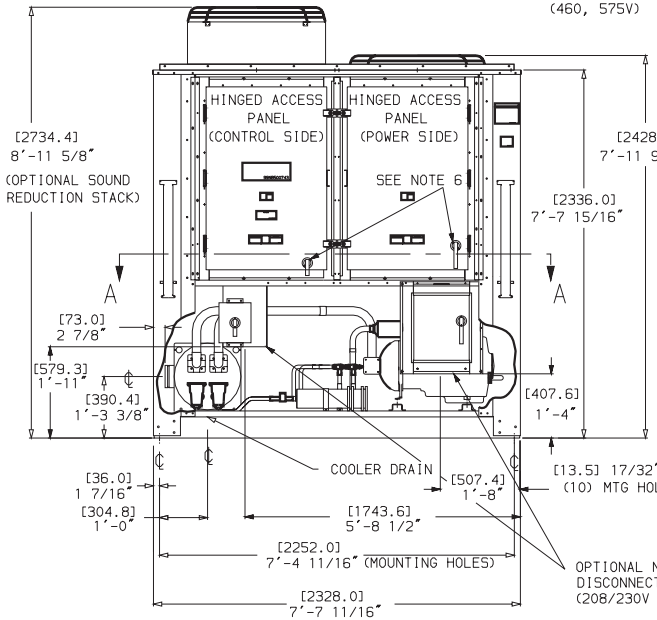

END VIEW

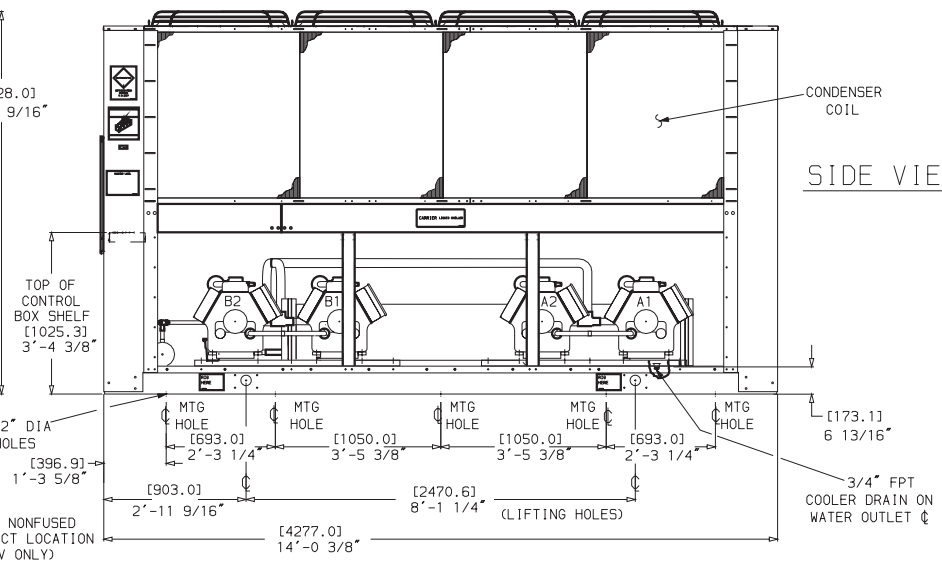

SIDE VIEW

DATE	SUPERSEDES			REV
01/07/99	NEW	30GTN/R,30GUN/R100-110 AIR COOLED LIQUID CHILLER	30GT515299	–

FIELD WIRING DIAGRAM

NOTES:
1. Factory wiring is in accordance with national electrical code (NEC). Field modifications or additions must be in compliance with all applicable codes.
2. Wiring for main field power supply must be rated 75° C minimum. Use copper, copper clad aluminum or aluminum conductors for all units except use copper conductors only for the 30GT110 380/415 volt part-winding start unit.
3. Power for control circuit should be supplied from a separate source through a field-supplied fused disconnect with 30 amp maximum protection for 115 volt control circuits and 15 amp maximum protection for 230 volt control circuit for a unit with cooler heaters, 5 amp maximum for a unit without cooler heaters. Connect control circuit power to terminals 1 and 2 of TB4. Connect neutral side of supply to terminal 2 of TB4. Control circuit conductors for all units must be copper only.
4. Terminals 13 and 14 of TB5 are for field connection for remote ON-OFF control. The contacts must be rated for dry circuit application capable of reliably switching a 5 vdc, .5 mA load.
5. The maximum load allowed for the remote alarm and cooler pump relay circuit is 75 va sealed, 360 va inrush at 115 or 230 volt, depending on model.

LEGEND

A	—	Alarm
CWFS	—	Chilled Water Flow Switch
CWP	—	Cooler Pump Relay
CWPI	—	Chilled Water Pump Interlock
TB	—	Terminal Block
		Field Power Wiring
		Field Control Wiring
		Factory-Installed Wiring

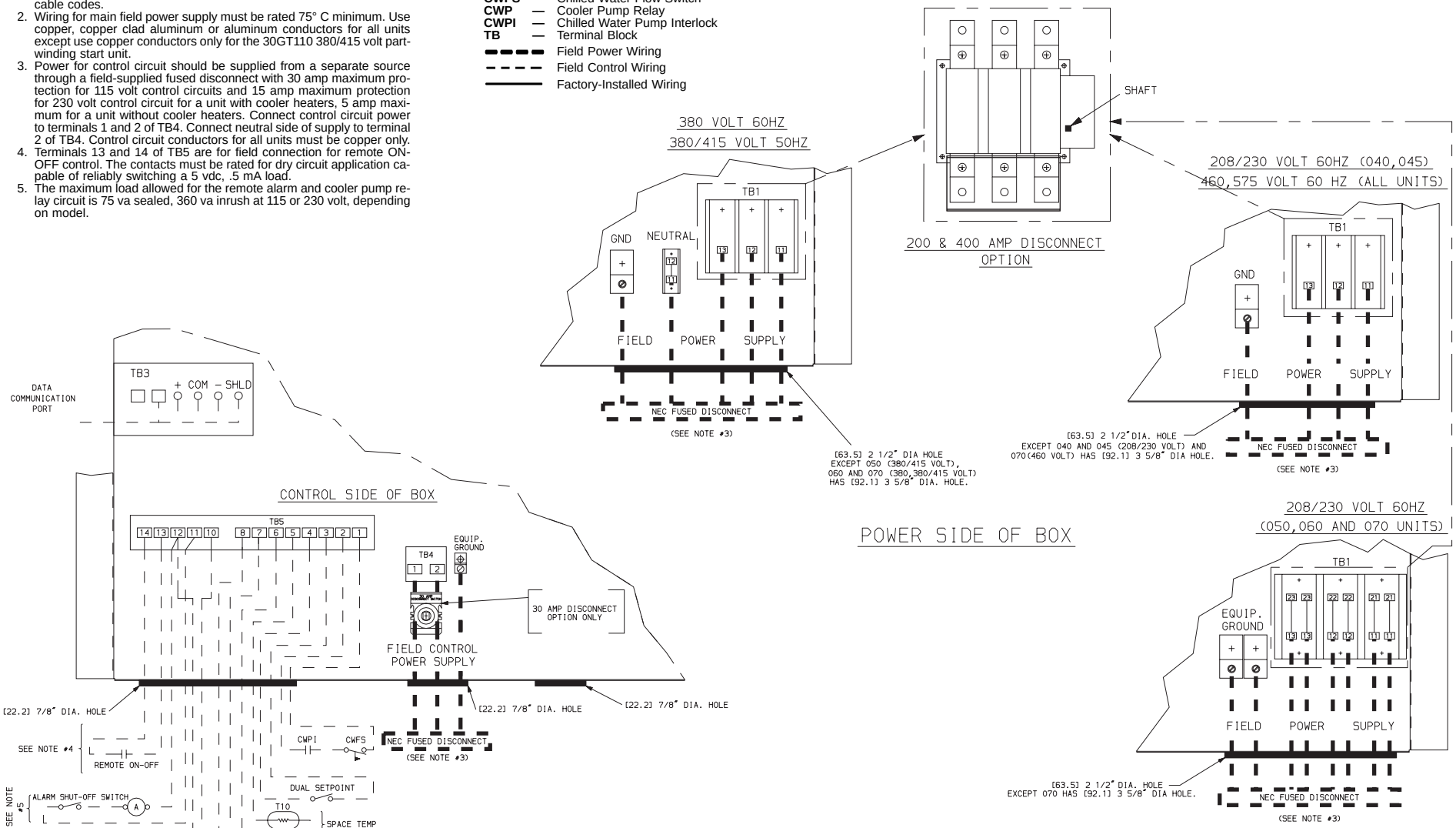

DATE	SUPERSEDES		
01/21/99	NEW	30GTN/R,30GUN/R040,045,050,060,070 AIR COOLED LIQUID CHILLER FIELD WIRING DIAGRAM (208/230,460,575,380,380/415V)	30GT515315	REV –

CUT ALONG DOTTED LINE

CUT ALONG DOTTED LINE

FIELD WIRING DIAGRAM

NOTES:

1. Factory wiring is in accordance with national electrical code (NEC). Field modifications or additions must be in compliance with all applicable codes.
2. Wiring for main field power supply must be rated 75° C minimum. Use copper, copper clad aluminum or aluminum conductors for all units except use copper conductors only for the 30GT110 380/415 volt part-winding start unit.
3. Power for control circuit should be supplied from a separate source through a field-supplied fused disconnect with 30 amp maximum protection for 115 volt control circuits and 15 amp maximum protection for 230 volt control circuit for a unit with cooler heaters, 5 amp maximum for a unit without cooler heaters. Connect control circuit power to terminals 1 and 2 of TB4. Connect neutral side of supply to terminal 2 of TB4. Control circuit conductors for all units must be copper only.
4. Terminals 13 and 14 of TB5 are for field connection for remote ON-OFF control. The contacts must be rated for dry circuit application capable of reliably switching a 5 vdc, .5 mA load.
5. The maximum load allowed for the remote alarm and cooler pump relay circuit is 75 va sealed, 360 va inrush at 115 or 230 volt, depending on model.

LEGEND

A	—	Alarm
CWFS	—	Chilled Water Flow Switch
CWP	—	Cooler Pump Relay
CWPI	—	Chilled Water Pump Interlock
TB	—	Terminal Block
		Field Power Wiring
		Field Control Wiring
		Factory-Installed Wiring

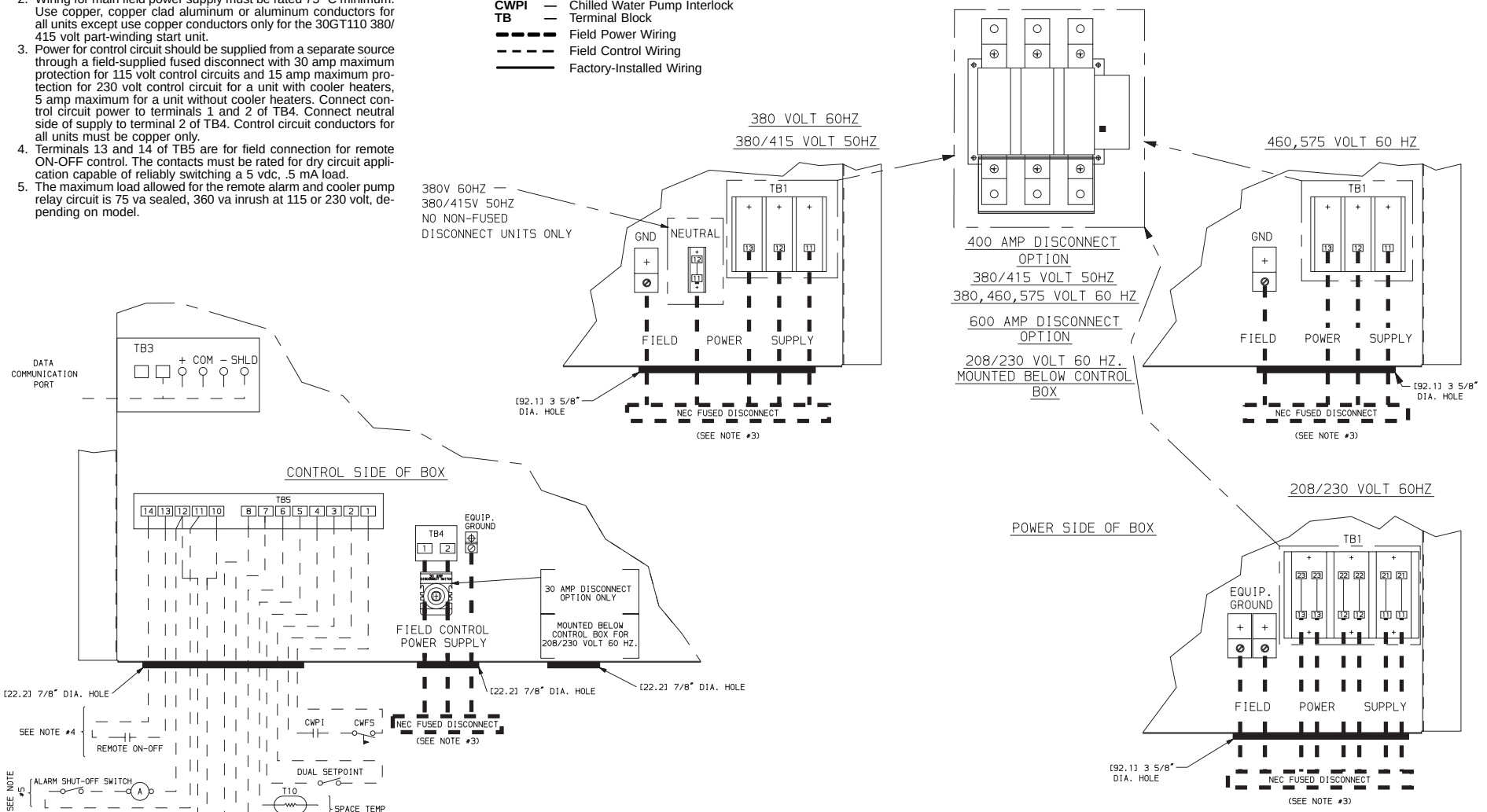

DATE	SUPERSEDES		
01/21/99	NEW	30GTN/R,30GUN/R080,090,100,110 AIR COOLED LIQUID CHILLER FIELD WIRING DIAGRAM (208/230,460,575,380,380/415V)	30GT515314	REV –